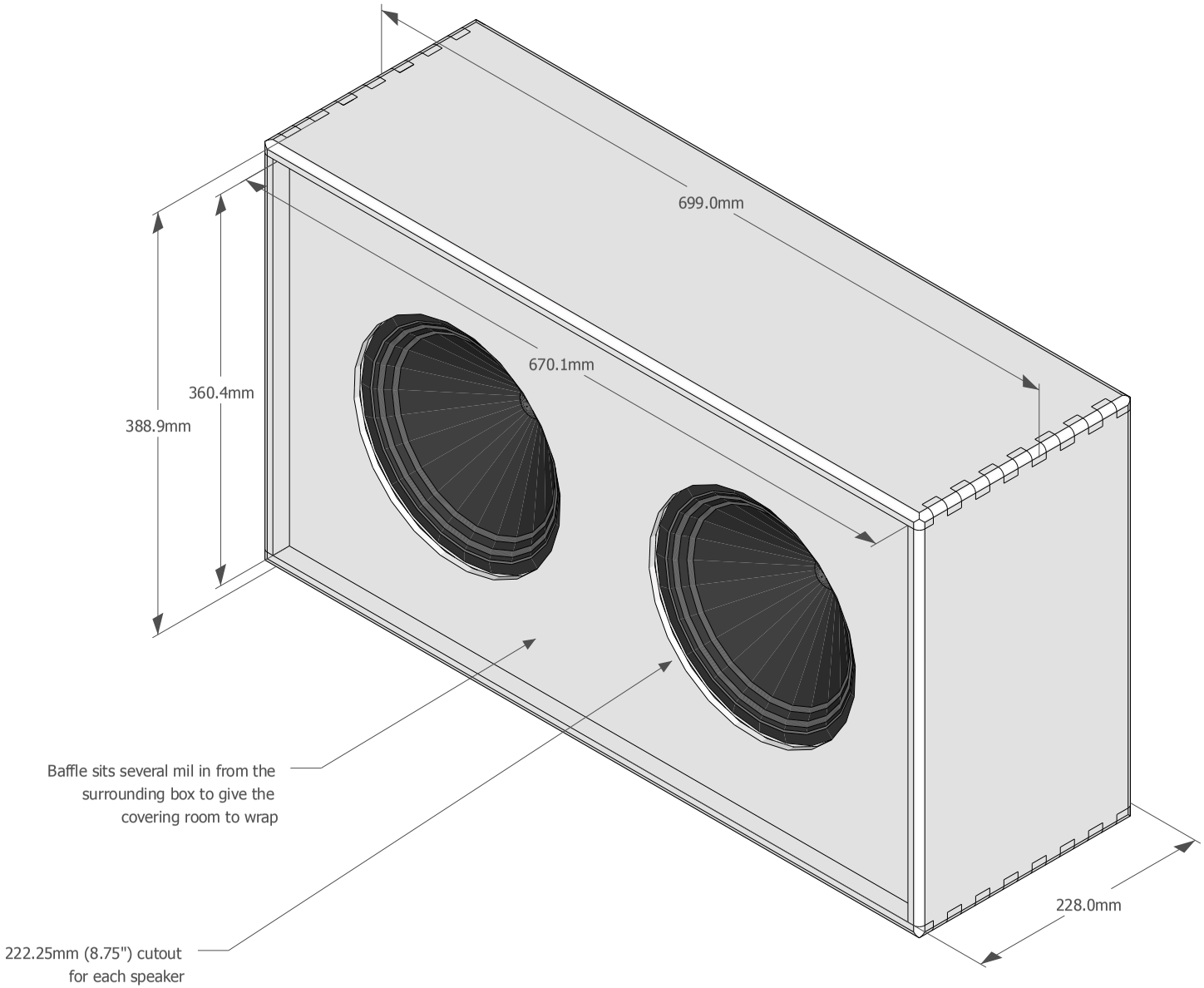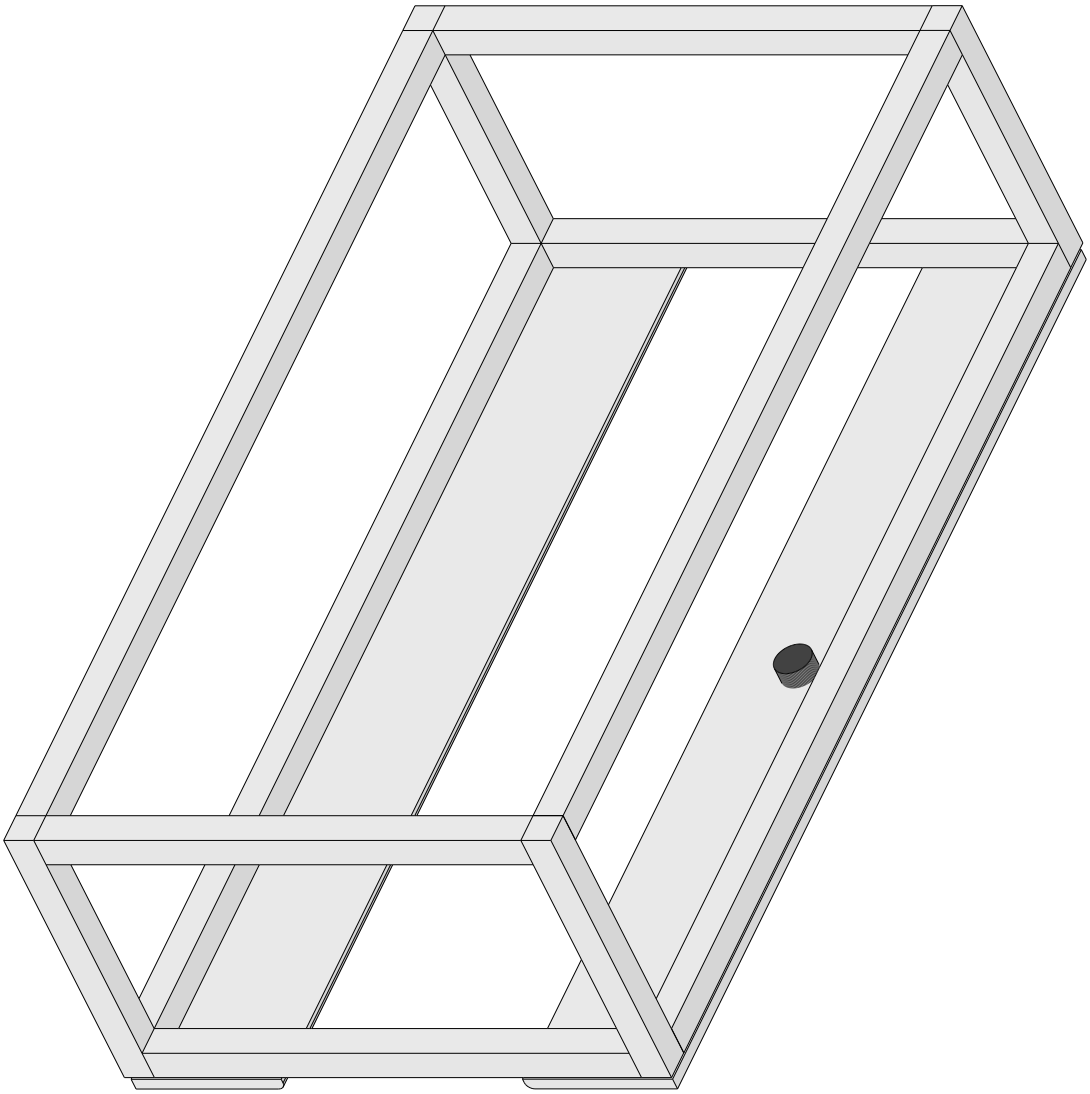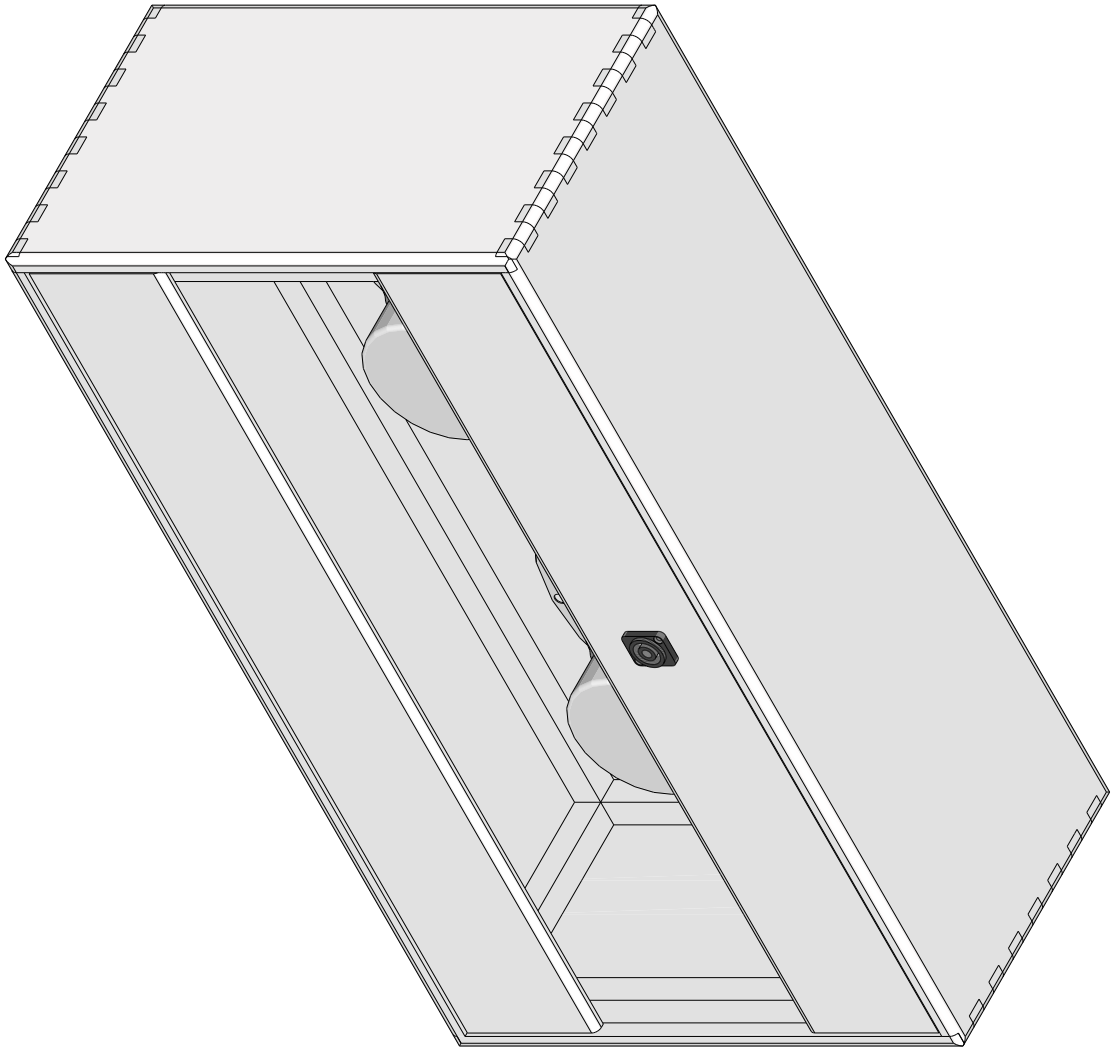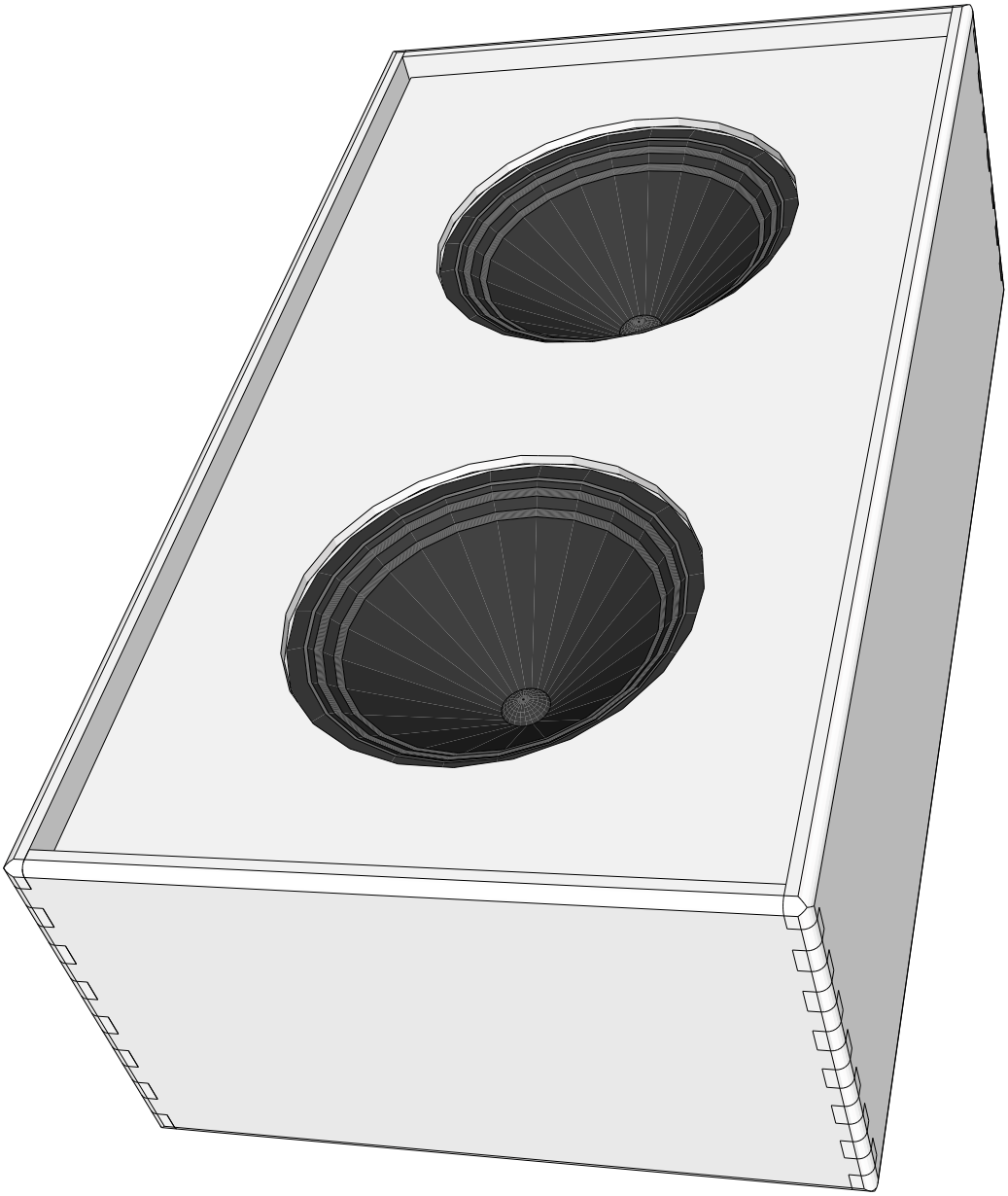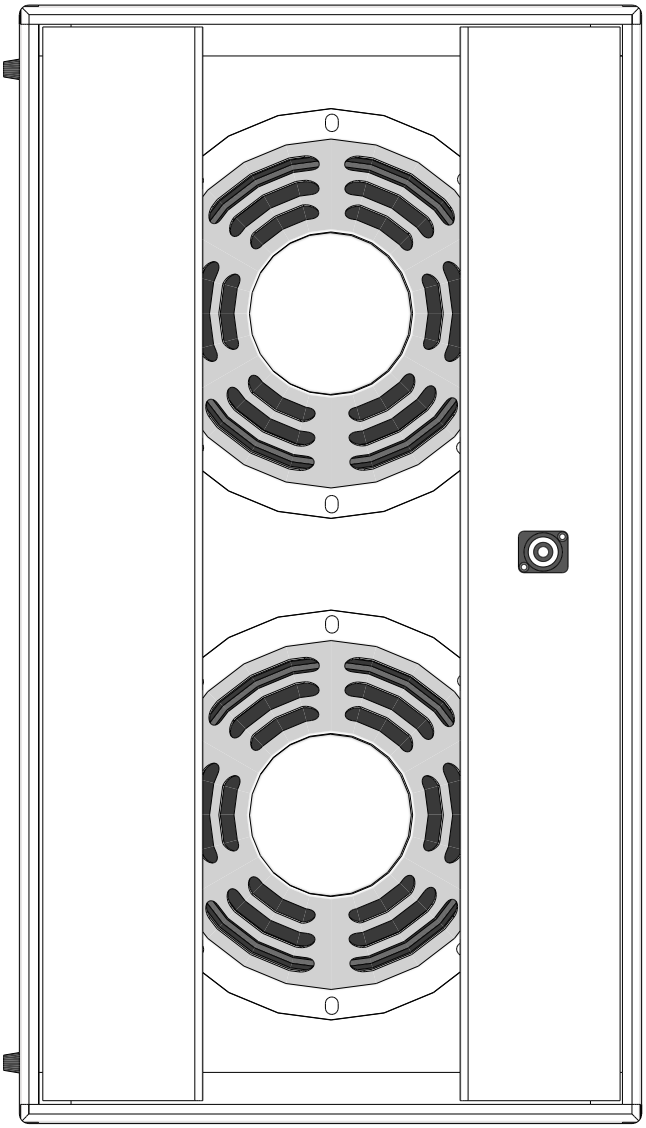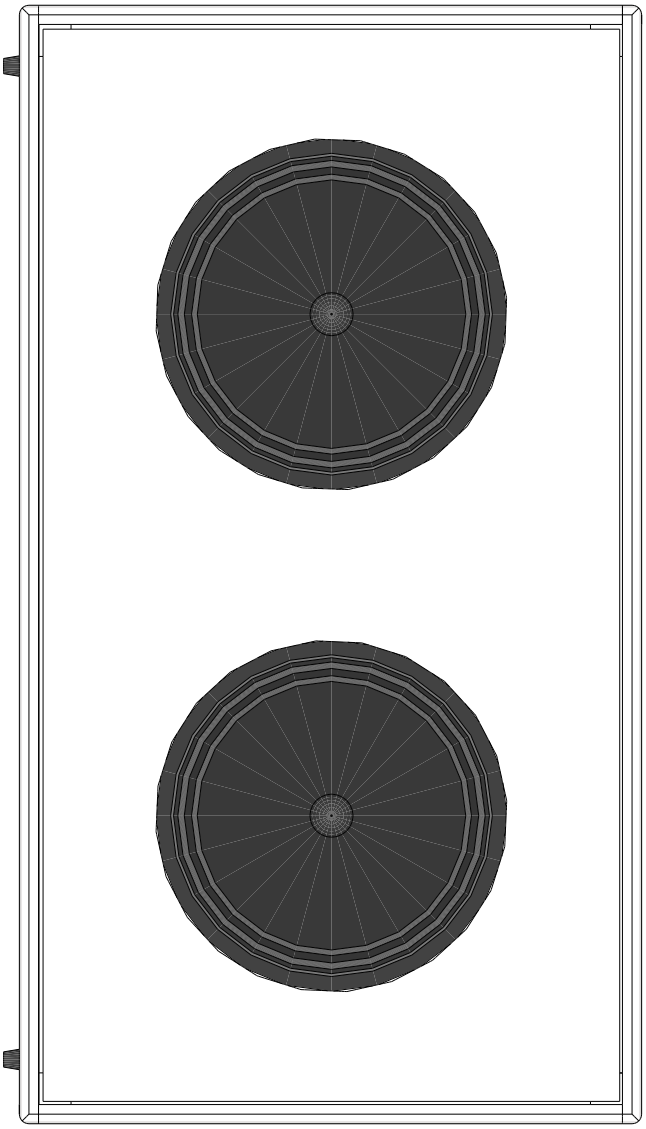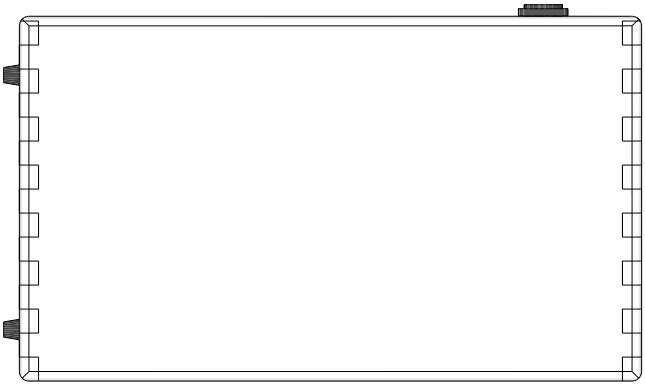
699.0mm
670.1mm
360.4mm
388.9mm
Baffle sits several mil in from the surrounding box to give the covering room to wrap
222.25mm (8.75") cutout for each speaker
228.0mm